URM2610

ISM Transceiver Module with +20dBm Output Power

Product Features

- **Features**
  - Frequency range: 200MHz~960MHz
  - Modulation: (G)FSK, OOK
  - Data rate: 0.1 ~ 300 kbps
  - SMD Package: 16x12x1.8mm
  - Support NRZ, Manchester encoding, Data whitening
  - ACK / Automatic retransmission
  - Support RSSI, ±1db detection accuracy
  - Configurable Packet handler and 128-byte TX/RX FIFO
  - AGC / AFC
  - Support FEC
- **RX Sensitivity (F_{RF}=433.92MHz)**
  - -130dBm @ 0.1kbps
  - -120dBm @ 1.2kbps
  - -113dBm @ 10kbps
  - -103dBm @ 100kbps
  - -97dBm @ 300kbps
- **RX Current (F_{RF}=433.92MHz)**
  - BUCK DCDC: 6.5mA
  - No BUCK DCDC: 12mA
- **TX Power**
  - -20dBm ~ +20dBm
- **TX Current (F_{RF}=433.92MHz BUCK DCDC)**
  - 16mA @ 10dBm
  - 22mA @ 13dBm
  - 40mA @ 17dBm
- **TX Current (F_{RF}=433.92MHz NO BUCK DCDC)**
  - 22mA @ 10dBm
  - 28mA @ 13dBm
  - 48mA @ 17dBm
  - 80mA @ 20dBm

- **Shutdown Current**
  - < 10nA
- **Interface**
  - Standard 4-wire or 3-wire SPI, up to 16Mbps
  - External Reset
  - Direct Mode
- **Electrical Specifications**
  - Operating Voltage: 1.8V~3.6V
  - Operating Temperature: -40°C ~85°C
  - ESD: HBM 3KV（Chip）
- **Support**
  - SDK: Include Software, Documents, Tools and Demo
  - EVB hardware board

Unicmicro

1 Overview

The purpose of this URM2610 spec covers mainly for the hardware and RF parameter information of the module.

URM2610 module design is based on the high performance UM2010 chip. The UM2010 is high-performance, low-power wireless transceiver covering the sub-1GHz frequency bands from 200MHz~960MHz, which includes a complete line of reveiver, transmitter, frequency synthesizer and modem.

URM2610 operates at 315/433/868/915 MHz ISM band. The low receive sensitivity coupled with +20dBm output power ensure extended range and improved link performance.

Applications:

- Industrial Sensor and Industrial Control
- Home security and alarm
- Smart metering
- Remote control, Wireless toys
- Telemetry
- Garage and gate openers
- Remote keyless entry
- Health monitors
- Home automation
- Electronic shelf labels

Unicmicro

 Copyright© 2022 Unicmicro (Guangzhou) Co., Ltd.

2 Pinouts and Pin Descriptions

2.1 Pinouts

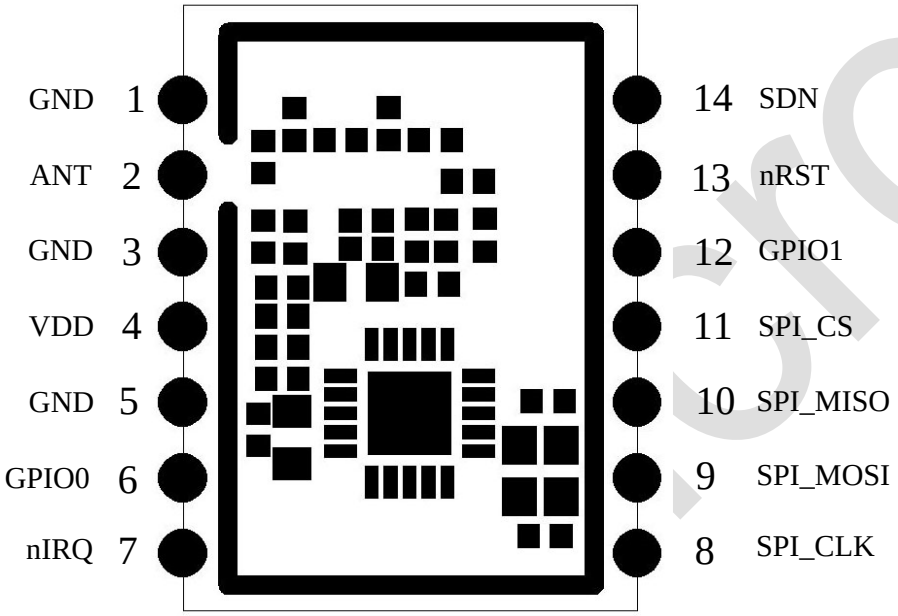

Figure 3-1: Pinouts

2.2 Pin Descriptions

Table 3-1：Pin Descriptions

Pin	Pin Name	IO Type	Description
1	GND	G	Ground.
2	ANT	AI/ AO	RF Signal Input/Output.
3	GND	G	Ground.
4	VDD	P	Power Supply Input, 1.8V ~3.6V. The recommended VDD supply voltage is +3.3V.
5	GND	G	Ground.
6	GPIO0	DIO	Configurable Digital I/O.
7	nIRQ	DO	General Microcontroller Interrupt Status Output.
8	SPI_CLK	DI	SPI Clock Input.
9	SPI_MOSI	DIO	SPI Data Input (or 3-wire SPI Data Input/Output).
10	SPI_MISO	DO	SPI Data Output.
11	SPI_CS	DI	SPI Chip select input.

Copyright© 2022 Unicmicro (Guangzhou) Co., Ltd.

Pin	Pin Name	IO Type	Description
12	GPIO1	DIO	Configurable Digital I/O.
13	nRST	DIO	Reset Pin (default), or as GPIO2.
14	SDN	DI	**Shutdown Input Pin.** SDN should be = 0 in all modes except Shutdown mode. When SDN = 1, the chip will be completely shut down.

Note:

RF- Radio Frequency Signal; A –Analog Signal; D –Digital Signal; I – Input; O – Output; G – Ground; P – Power.

Unicmicro

 Copyright© 2022 Unicmicro (Guangzhou) Co., Ltd.

3 Electrical Specifications

3.1 Absolute Maximum Ratings

Stresses beyond those listed under “Absolute Maximum Ratings” may cause permanent damage to the device. These are stress ratings only and functional operation of the device at or beyond these ratings in the operational sections of the specifications is not implied. Exposure to absolute maximum rating conditions for extended periods may affect device reliability.

Table 3-1: Absolute Maximum Ratings

Symbol	Parameter	Min	Typ	Max	Unit	Note
V_{DD}		-0.3		+3.6	V	
T_J	Junction Temperature	-40		+125	℃	
T_{stg}	Store temperature	-50		+150	℃	
I_{LATH}	Latch up Current	-100		+100	mA	Norm: Jedec78
ESD	Electronic Static Discharge	-3		+3	KV	HBM (chip)

3.2 Electrical Characteristics

Unless otherwise specified, Tc=25℃, F=433.92MHz, GFSK, VDD=3.3V.

Table 3-2: Electrical Characteristics

Symbol	Parameter	Test Condition	Value			Unit
			Min	Typ	Max	
Recommended Operating Conditions						
VDD	Supply Voltage		1.8	3.3	3.6	V
T_c	Operating Temperature		-40		85	℃
F_{RF}	Frequency Range		200		960	MHz

Copyright© 2022 Unicmicro (Guangzhou) Co., Ltd.

Symbol	Parameter	Test Condition	Value			Unit
			Min	Typ	Max	
DR	Data Rate		0.1		300	kbps
Current consumption						
$I_{STANDBY}$	Power Saving Mode Current			40		uA
$I_{shutdown}$	Shutdown Mode Current			10		nA
I_{IDLE}	IDLE Mode Current (NO DCDC)	F_{RF}=315MHz		1.2		mA
		F_{RF}=433.92MHz		1.0		mA
		F_{RF}=868MHz		1.5		mA
		F_{RF}=915MHz		1.5		mA
	IDLE Mode Current (DCDC)	F_{RF}=315MHz		0.8		mA
		F_{RF}=433.92MHz		0.75		mA
		F_{RF}=868MHz		0.85		mA
		F_{RF}=915MHz		0.85		mA
I_{RX}	RX mode Current (No DCDC)	F_{RF}=315MHz		11.5		mA
		F_{RF}=433.92MHz		12		mA
		F_{RF}=868MHz		12.5		mA
		F_{RF}=915MHz		12.5		mA
	RX mode Current (DCDC)	F_{RF}=315MHz		6.5		mA
		F_{RF}=433.92MHz		6.5		mA
		F_{RF}=868MHz		7.0		mA
		F_{RF}=915MHz		7.0		mA
I_{TX}	TX mode Current @315MHz (No DCDC)	+20dBm		75		mA
		+17dBm		43		mA
		+13dBm		28		mA
		+10dBm		20		mA
	TX mode Current @433.92MHz (No DCDC)	+20dBm		80		mA
		+17dBm		48		mA
		+13dBm		28		mA
		+10dBm		22		mA
	TX mode Current @433.92MHz (DCDC)	+17dBm		40		mA
		+13dBm		22		mA
		+10dBm		16		mA
	TX mode	+20dBm		85		mA

Unicmicro

 Copyright© 2022 Unicmicro (Guangzhou) Co., Ltd.

Symbol	Parameter	Test Condition	Value			Unit
			Min	Typ	Max	
	Current @868MHz (No DCDC)	+17dBm		50		mA
		+13dBm		28		mA
		+10dBm		22		mA
	TX mode Current @915M (No DCDC)	+20dBm		85		mA
		+17dBm		50		mA
		+13dBm		28		mA
		+10dBm		22		mA
I_{FS}	PLL Tune Mode Current	F_{RF}=315MHz		7.5		mA
		F_{RF}=433.92MHz		8.2		mA
		F_{RF}=868MHz		9.0		mA
		F_{RF}=915MHz		9.0		mA
Receiver AC characteristic						
SEN	RX Sensitivity @315MHz (BER<0.1%)	DR=0.1kbps F_{DEV}=0.3kHz		-131		dBm
		DR=1.2kbps F_{DEV}=2.5kHz		-122		dBm
		DR=10kbps F_{DEV}=22kHz		-114		dBm
		DR=100kbps F_{DEV}=50kHz		-102		dBm
		DR=300kbps F_{DEV}=300kHz		-96		dBm
	RX Sensitivity @433.92MHz (BER<0.1%)	DR=0.1kbps F_{DEV}=0.3kHz		-130		dBm
		DR=1.2kbps F_{DEV}=2.5kHz		-120		dBm
		DR=10kbps F_{DEV}=22kHz		-113		dBm
		DR=100kbps F_{DEV}=50kHz		-103		dBm
		DR=300kbps F_{DEV}=300kHz		-97		dBm
	RX Sensitivity @868MHz (BER<0.1%)	DR=1.2kbps F_{DEV}=2.5kHz		-120		dBm
		DR=10kbps F_{DEV}=22kHz		-112		dBm
		DR=100kbps F_{DEV}=50kHz		-100		dBm

Unicmicro

 Copyright© 2022 Unicmicro (Guangzhou) Co., Ltd.

Symbol	Parameter	Test Condition	Value			Unit
			Min	Typ	Max	
		DR=300kbps F_{DEV}=300kHz		-96		dBm
	RX Sensitivity @915MHz (BER<0.1%)	DR=1.2kbps F_{DEV}=2.5kHz		-120		dBm
		DR=10kbps F_{DEV}=22kHz		-112		dBm
		DR=100kbps F_{DEV}=50kHz		-100		dBm
		DR=300kbps F_{DEV}=300kHz		-96		dBm
S11	Input impedance	F_{RF}=315MHz		-15		dB
		F_{RF}=433.92MHz		-15		dB
		F_{RF}=868MHz		-15		dB
		F_{RF}=915MHz		-15		dB
Pin_max	Maximun Iuput Power			+10		dBm
Co_REJ	Co-Channel Rejection			9		dB
Im_REJ	Image Rejection			-35		dB
1CH_REJ	Adjacent Channel Rejection	@200KHz channel spacing		-42		dB
2CH_REJ	Second Adjacent Channel Rejection	@400KHz channel spacing		-46		dB
3CH_REJ	Third Adjacent Channel Rejection	@600KHz channel spacing		-48		dB
Block	Blocking Immunity	10MHz offset		-72		dB
Transmitter Electrical Characteristics						
P_{out}	TX RF Output Power		-20		+20	dBm

Unicmicro

 Copyright© 2022 Unicmicro (Guangzhou) Co., Ltd.

Symbol	Parameter	Test Condition	Value			Unit
			Min	Typ	Max	
P_{step}	TX RF Output Steps			1		dB
Frequency Synthesizer Electrical Characteristics						
F_{XTAL}	Crystal Oscillator Frequency			30		MHz
F	Output Frequency Range		200		960	MHz
F_{RES}	Output Frequency Accuracy	F_{RF}=433.92MHz		12		Hz
T_{stable}	Frequency Stabilization Time			150		us
PN	Phase Noise	@100KHz		-97		dBc/Hz
		@500KHz		-115		dBc/Hz
		@1MHz		-120		dBc/Hz
Digital I/O Specification						
V_{IH}	Logic High Level Input Voltage		0.8*VDD		VDD	V
V_{IL}	Logic Low Level Input Voltage		0		0.2*VDD	V
I_{LEAK}	Input Leakage Current				100	nA
V_{OH}	Logic High Level Output Voltage	1mA load	VDD-0.4			V
V_{OL}	Logic low Level Output Voltage	1mA load			VSS+0.4	V

Unicmicro

 Copyright© 2022 Unicmicro (Guangzhou) Co., Ltd.

4 Typical Application

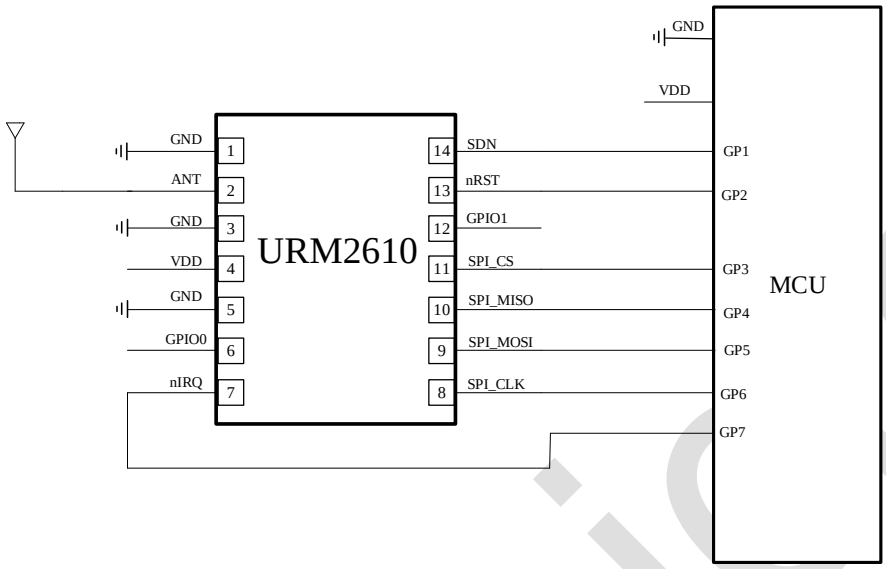

Figure 4-1: Typical Application

Note:

The antenna port impedance of the module has been matched to 50 Ω. If a non-standard antenna is used, the peripheral matching network can be reserved for optimization and debugging.

Unicmicro

 Copyright© 2022 Unicmicro (Guangzhou) Co., Ltd.

5 Mechanical Dimension

Unit: mm

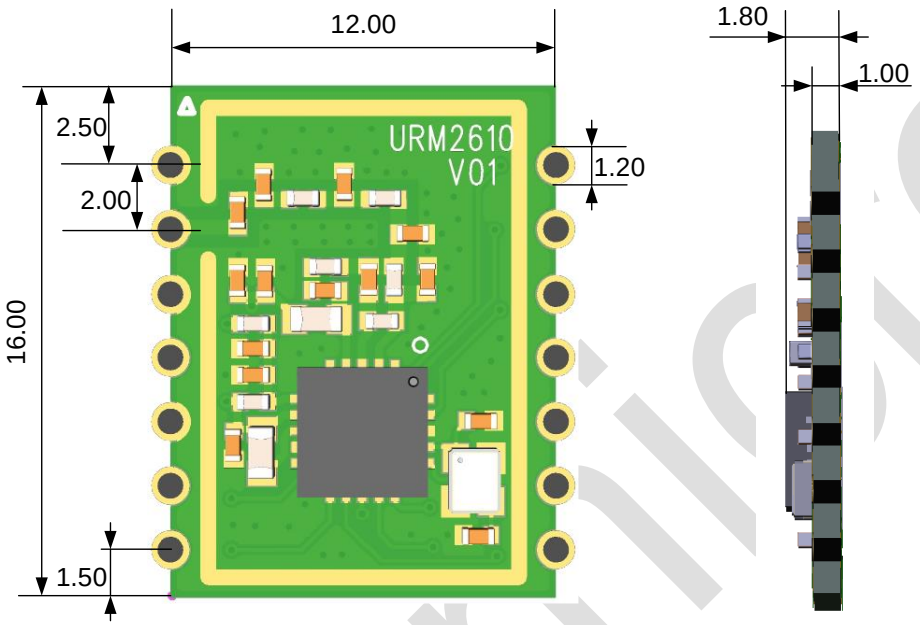

Figure 5-1: Mechanical Dimension

Unicmicro

Copyright© 2022 Unicmicro (Guangzhou) Co., Ltd.

6 Order information

Model	Frequency band	Output power
URM2610-315	315MHz	+20dBm
URM2610-433	433MHz	+20dBm
URM2610-868	868MHz	+20dBm
URM2610-915	915MHz	+20dBm

Unicmicro

 Copyright© 2022 Unicmicro (Guangzhou) Co., Ltd.

7 Revision History

Revision	Date	Changes
V1.0	2022.03.22	Initial release.
V1.1	2022.05.20	Update electrical characteristics.

Unicmicro

 Copyright© 2022 Unicmicro (Guangzhou) Co., Ltd.

8 Contact US

Company: Unicmicro (Guangzhou) Co., Ltd

Address:

Guangzhou: NO.603,604, Building A1, 191 Kexue Road, Huangpu District, Guangzhou

Postcode: 510700

TEL: +86-020-31600229

Shanghai: NO.1509, Building 2, 1077 ZuChongZhi Road, Zhangjiang High-Tech Park, Pudong District, Shanghai

Postcode: 201210

TEL: +86-021-50307225

Email: sales@unicmicro.com

Website: www.unicmicro.com

The copyright of all parts of this document belongs to Unicmicro (Guangzhou) Co., Ltd. (“Unicmicro”). Without the authorization and permission of Unicmicro, no individual or organization shall copy, reprint all or part of the components of this document.

There is no guarantee, position expression or other implication in any form in this document, if there is any direct or indirect loss caused by all information in this document or the product mentioned therein, Unicmicro will not guarantee any liability for it.

In addition, the product specifications and information mentioned in this document are for reference only, Unicmicro reserve the right to make changes, corrections, enhancements, modifications, and improvements to this document at any time without notice.